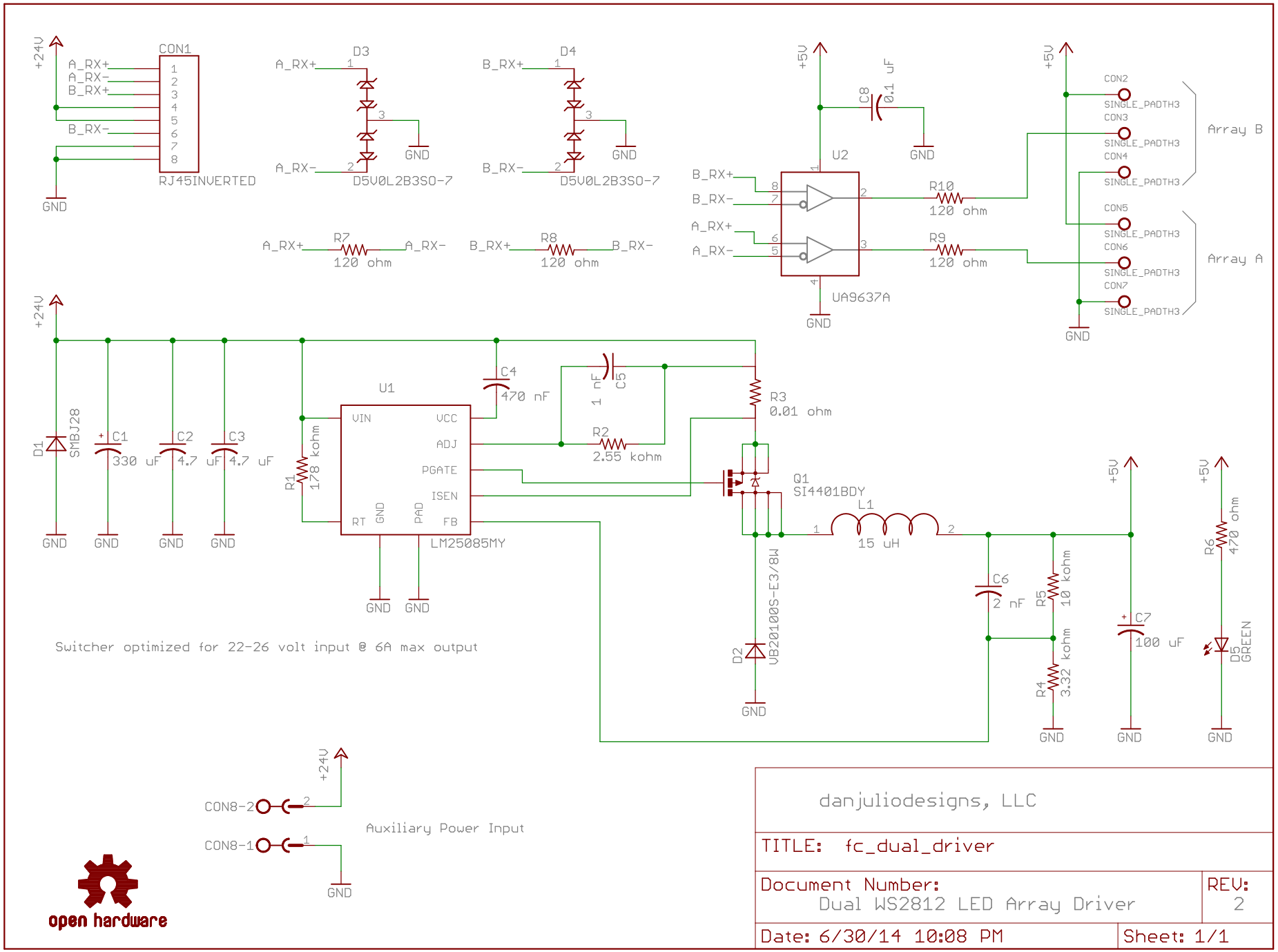

6/30/14 10:12 PM f=0.98 /Users/danjulio/Documents/eagle/Weavers/DualDriver/fc_dual_driver.sch (Sheet: 1/1)